更改 REV	设 变 内 容 MODIFICATION	日 期 DATE	制 图 DRAW	核 准 APPROVE
A	图面发行	2012/10/29	JDL	Oscar

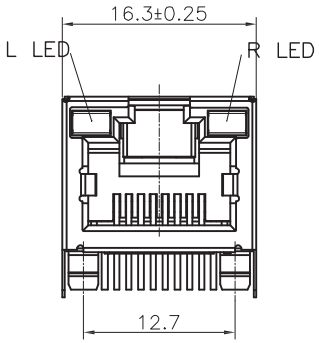

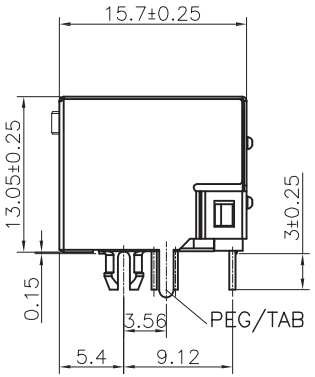

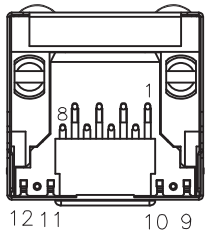

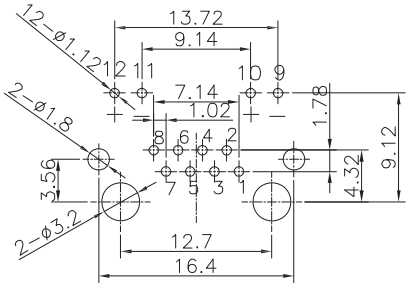

PC Board Layout

NOTES:

MATERIAL:
1.HOUSING MATERIAL :GLASS FILLED POLYESTER(UL94V-0).
2.CONTACT MATERIAL :PHOSPHOR BRONZE ø0.46mm (C5100).
3.PLATING :GOLD PLATING OVER NICKEL.
4.SHIELD: COPPER ALLOY(OR STEEL ALLOY) 0.20mm THICKNESS PLATING NI.
5.LED: OPTION.

ELECTRICAL:
1.VOLTAGE RATING :125 VAC RMS.
2.CURRENT RATING :1.5 AMP.
3.CONTACT RESISTANCE :50 MILLIOHMS MAX.
4.INSULATION RESISTANCE :500 MEGOHMS MIN @ 500V DC.
5.DIELECTRIC WITHSTANDING RESISTANCE :1000V AC RMS 50Hz. 1MIN.
6.LED RATINGS:FORWARD VOLTAGE:2.2 VOLTS TYPICAL.
REVERSE VOLTAGE:5 VOLTS MAXIMUM.

MECHANICAL:
1.DURRABILITY:750 CYCLES MIN.
2.PCB RETENTION PRE-SOLDER

ENVIRONMENTAL:
1.STORAGE :-40°C TO +85°C.
2. OPERATION: -20°C TO 70°C.

MATES WITH MODULAR PLUG CONFORMING TO FCC PART 68,SUBPART F.

PART NUMBER: 56A-S1188L1-XX

GOLD PLATING U"
1-Fu" 2-2u" 3-3u" 4-6u"

PLASTIC MATERIALI&COLOR:Black/Yellow/Gray
1-PBT+20%GF Black
2-PA46 Black

GREEN

YELLOW

单色灯脚位图

QC :Inspection Item / CPK :Cp/Cpk and SPC Control Item	DIMENSION IN mm [Inch]		Shenzhen Chuangqin Technology Co., Ltd. 深 圳 市 创 勤 科 技 有 限 公 司
	TOLERANCE UNLESS OTHERWISE SPECIFIED		专案号 FILE NO. / 图 号 DWG NO. 56A-S1188L1
	.X± 0.20	X.°± 1°	
	.XX± 0.15	.X°± 0.5°	名称 TITLE 56A 1X1 8P8C LED PCB JACK WIHT SHIELDED SIDE ENTRY,TAB-UP,ROUND PIN
	.XXX± 0.075		
	核 准 APPROVE	审 核 CHECK	制 图 DRAW Oscar / 角法 PROJ. / 页数 SHEET 1 / 1
			比例 SCALE 1:1 / 图纸 SIZE A3 / 更改 REV A