REV.	ECN.NO.	APPD.
A		

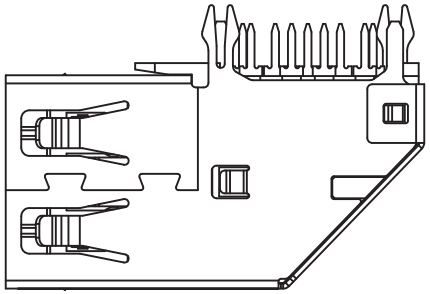

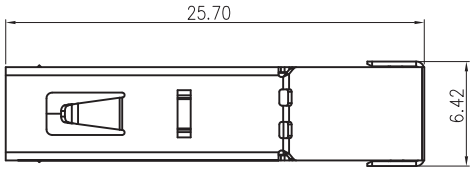

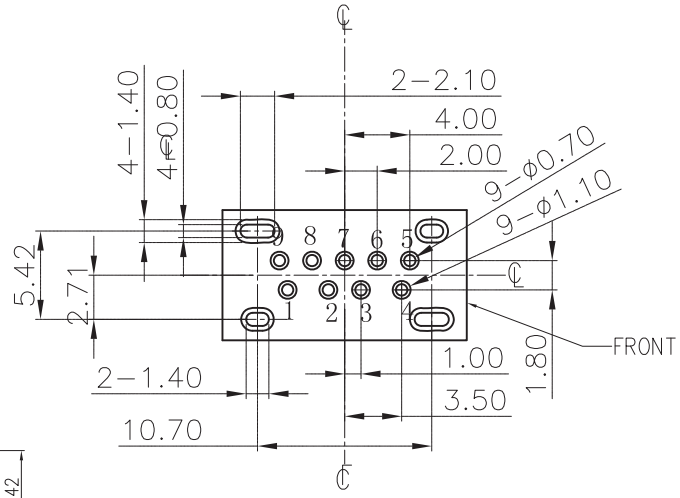

PCB LAYOUT(TOP VIEW)

SPECIFCATIONS:
Contact current Rating:
1.8 Amperes for pin1&pin4.
0.25 Amperes other contacts
Dielectric Withstanding Voltage:AC 100V(RMS)
Insulation resistance:100Megohms Minimum.
Contact Resistance:
30mΩ Max for pin1&pin4
50mΩMax for other contacts
Mechanical Characteristics:
Mating Force:35 Newtoms.Maximum
Unmating Force:10 Newtoms.MInimum.
8N Min After Durability

MATERIAL:
Housing: PBT Blue UL94V-0
Contact: copper alloy(T=0.20mm)
Shell: SUS

PLATING:
Contact: Gold Falsh Plated on contact area
Tin Plated on solder area
Nickel underplating over all
Shell: Nickel Plated

operating Temperature:-55°to+85°

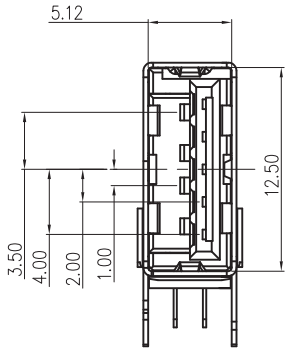

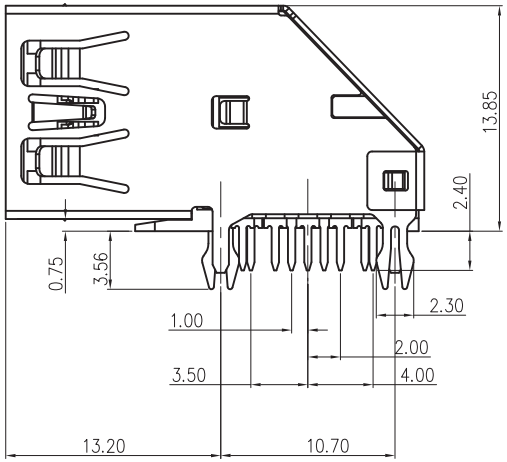

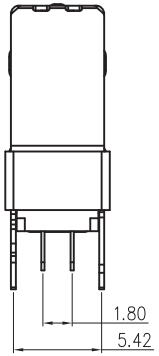

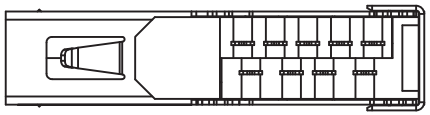

Pin Number	Signal Name	Pin Number	Signal Name
1	VBUS	5	SSRX-
2	D-	6	SSRX+
3	D+	7	GND
4	GND	8	SSTX-
Shell	Shield	9	SSTX+

TOLERANCE UNLESS OTHERWISE SPECIFIED			
.XXX ±0.10		.X° ±3°	
.XX ±0.20		.XX° ±2°	
.X ±0.30			
APPROVED		PART NAME:	USB 3.0 AF 侧插90度 无卷边
CHECKED		PART No:	CQ039-AFCC30921125
DRAWED	LINYUN	PROJECTION:	
DATE	2014.08.01		

UNIT:	SCALE	SHEET	REV.
mm	1:1	1OF1	A

深 圳 市 创 勤 科 技 有 限 公 司
Shenzhen Chuangqin Technology Co., Ltd.